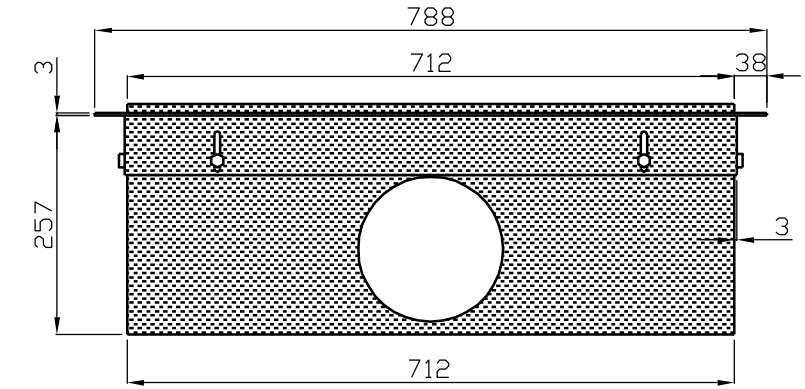

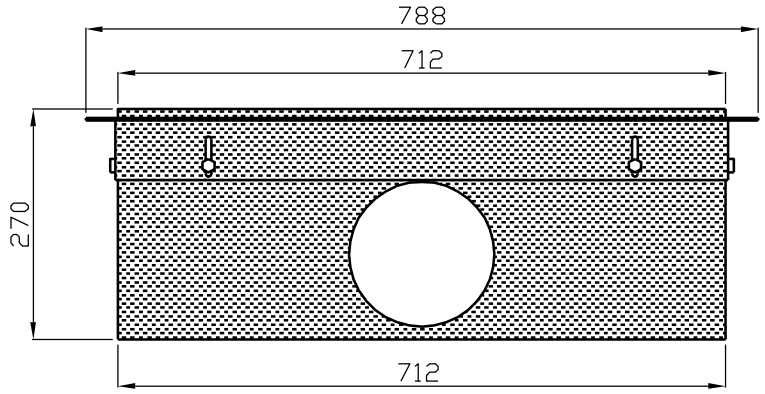

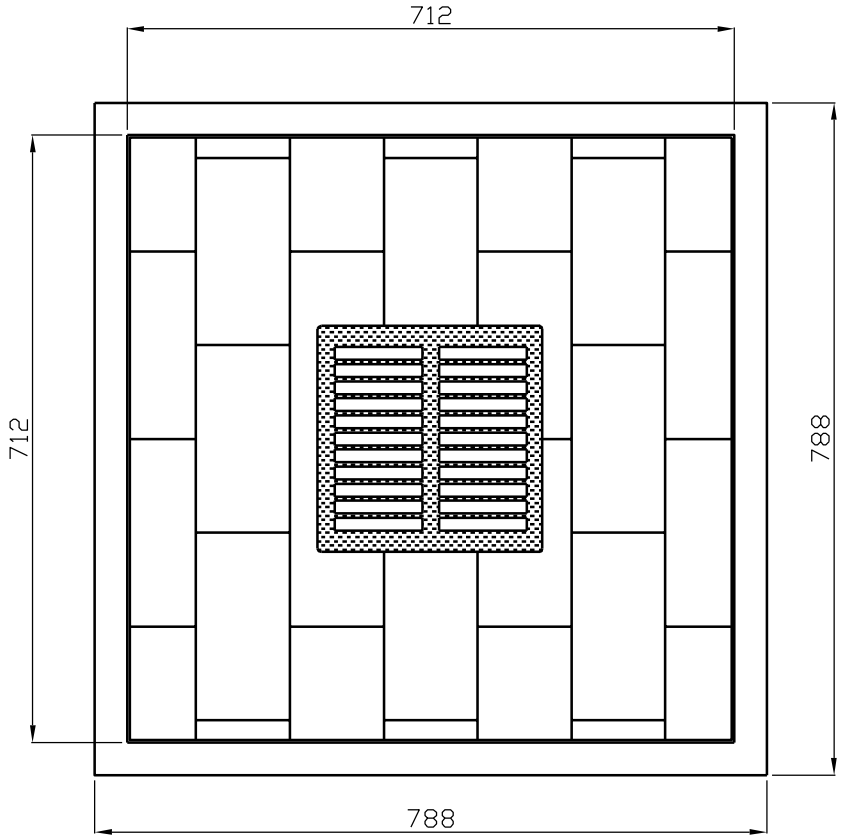

Niveau dessus briques + 260/sol

Ind:A	19.02.08	Création document	SOLE 4 FACES SUSP	TOTEM Tél:04.75.40.18.89 Fax:04.75.41.08.39 ZA Guimand 26120 MALISSARD

Easy PDF Creator is professional software to create PDF. If you wish to remove this line, buy it now.